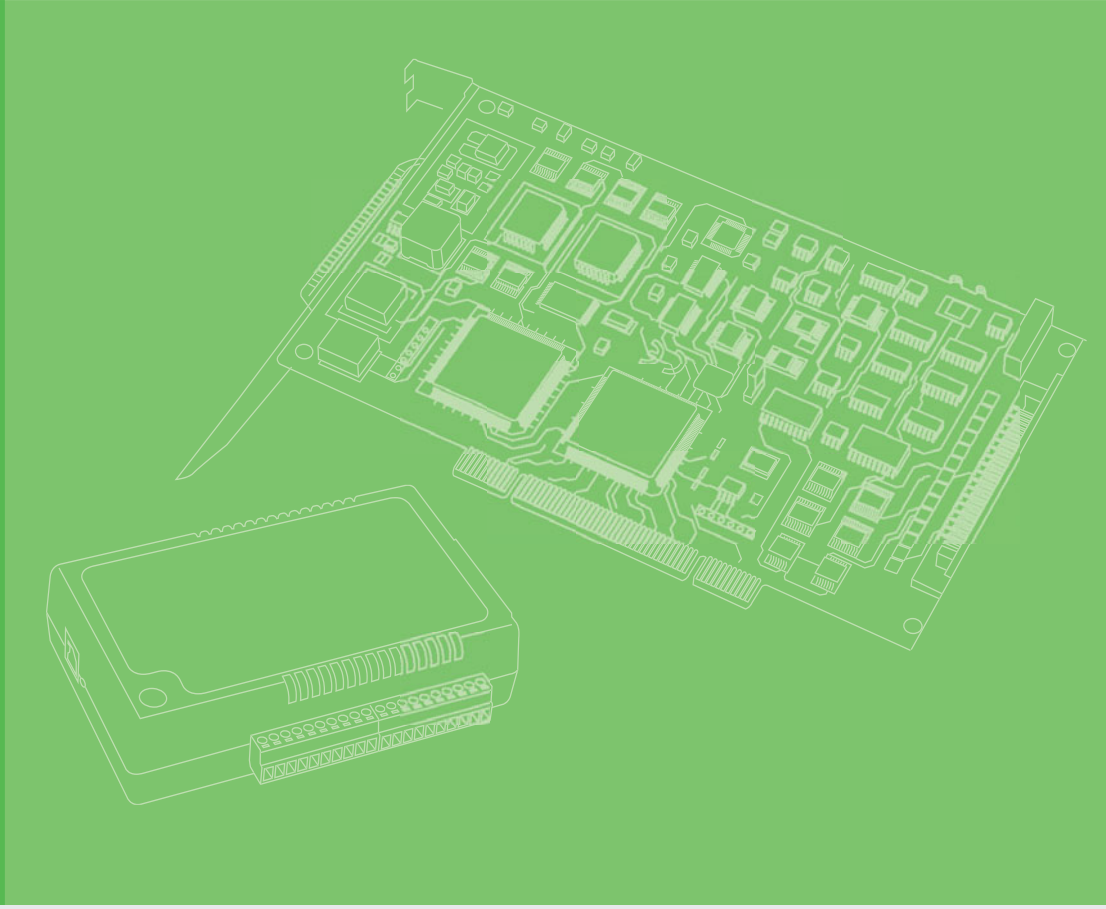

User Manual

PCI-1756

64-ch Isolated Digital I/O PCI Card

ADVANTECH

Enabling an Intelligent Planet

Copyright

Acknowledgements

Intel and Pentium are trademarks of Intel Corporation.

Microsoft Windows and MS-DOS are registered trademarks of Microsoft Corp.

All other product names or trademarks are properties of their respective owners.

Product Warranty (2 years)

Advantech warrants to you, the original purchaser, that each of its products will be free from defects in materials and workmanship for two years from the date of purchase.

This warranty does not apply to any products which have been repaired or altered by persons other than repair personnel authorized by Advantech, or which have been subject to misuse, abuse, accident or improper installation. Advantech assumes no liability under the terms of this warranty as a consequence of such events.

Because of Advantech's high quality-control standards and rigorous testing, most of our customers never need to use our repair service. If an Advantech product is defective, it will be repaired or replaced at no charge during the warranty period. For out-of-warranty repairs, you will be billed according to the cost of replacement materials, service time and freight. Please consult your dealer for more details.

If you think you have a defective product, follow these steps:

1. Collect all the information about the problem encountered. (For example, CPU speed, Advantech products used, other hardware and software used, etc.) Note anything abnormal and list any onscreen messages you get when the problem occurs.
2. Call your dealer and describe the problem. Please have your manual, product, and any helpful information readily available.
3. If your product is diagnosed as defective, obtain an RMA (return merchandize authorization) number from your dealer. This allows us to process your return more quickly.
4. Carefully pack the defective product, a fully-completed Repair and Replacement Order Card and a photocopy proof of purchase date (such as your sales receipt) in a shippable container. A product returned without proof of the purchase date is not eligible for warranty service.
5. Write the RMA number visibly on the outside of the package and ship it prepaid to your dealer.

Part No. XXXXXXXXXX Edition 1

Printed in Taiwan May 2015

Declaration of Conformity

CE

This product has passed the CE test for environmental specifications when shielded cables are used for external wiring. We recommend the use of shielded cables. This kind of cable is available from Advantech. Please contact your local supplier for ordering information.

FCC Class A

Note: This equipment has been tested and found to comply with the limits for a Class A digital device, pursuant to part 15 of the FCC Rules. These limits are designed to provide reasonable protection against harmful interference when the equipment is operated in a commercial environment. This equipment generates, uses, and can radiate radio frequency energy and, if not installed and used in accordance with the instruction manual, may cause harmful interference to radio communications. Operation of this equipment in a residential area is likely to cause harmful interference in which case the user will be required to correct the interference at his own expense.

Technical Support and Assistance

1. Visit the Advantech web site at www.advantech.com/support where you can find the latest information about the product.
2. Contact your distributor, sales representative, or Advantech's customer service center for technical support if you need additional assistance. Please have the following information ready before you call:
   - Product name and serial number
   - Description of your peripheral attachments
   - Description of your software (operating system, version, application software, etc.)
   - A complete description of the problem
   - The exact wording of any error messages

Packing List

Before setting up the system, check that the items listed below are included and in good condition. If any item does not accord with the table, please contact your dealer immediately.

- PCI-1756 DAQ Card
- StartUp or User Manual
- Companion DVD-ROM with DAQNavi drivers included

Safety Precaution - Static Electricity

Follow these simple precautions to protect yourself from harm and the products from damage.

- To avoid electrical shock, always disconnect the power from your PC chassis before you work on it. Don't touch any components on the CPU card or other cards while the PC is on.
- Disconnect power before making any configuration changes. The sudden rush of power as you connect a jumper or install a card may damage sensitive electronic components.

Contents

Chapter 1

Introduction

This chapter introduces the PCI-1756 cards and their typical applications.

Sections include:

- Features
- Applications
- Installation Guide
- Software Overview
- Device Driver Roadmap
- Accessories

1.1 Introduction

Thank you for buying the Advantech PCI-1756 which is a 32/32-ch isolated digital input/output card. It is an advanced-performance data acquisition card based on 32-bit PCI bus architecture. It features a unique circuit design and complete functions for data acquisition and control. The following sections of this chapter will provide further information about features of PCI-1756, a Quick Start for installation, together with some brief information on software and accessories.

1.2 Features

- 32/32 isolated digital input/output channels
- Wide input range (10 ~ 50 V_{DC})
- Either +/- voltage input for DI by group
- Wide output range (5 ~ 40 V_{DC})
- High sink current on isolated output channels (200 mA max./ch)
- High over-voltage protection (70 V_{DC})
- High-voltage isolation (2,500 V_{DC})
- 2,000 VDC ESD protection
- Output status read-back
- Keeps the output settings and values after system hot reset
- Interrupt handling capability
- Channel-freeze function
- Board ID

PCI-1756 offers the following main features:

Robust Protection

The PCI-1756 features a robust isolation protection for applications in industrial, lab and machinery automation. The PCI-1756 can durably withstand a voltage up to 2,500 VDC, preventing your host system from any incidental harms.

Wide Input Range

The PCI-1756 has a wide range of input voltage from 10 to 50 V_{DC}, and it is suitable for most industrial applications with 12 V_{DC} and 24 V_{DC} input voltage. In the mean time, we are also ready to serve your special needs for specific input voltage range. Do not hesitate to ask us about tailoring our standard products to meet your specifications. All these merits make PCI-1756 the best choice for industrial applications.

Wide Output Range

The PCI-1756 also features a wide output voltage range from 5 to 40 V_{DC}, suitable for most industrial applications with 12 V_{DC}/24 V_{DC} output voltage. In the mean time, we are also ready to serve your special needs for specific output voltage range. Do not hesitate to ask us about tailoring our standard products to meet your specifications. All these merits make PCI-1756 the best choice for industrial applications.

Board ID Setting

The PCI-1756 has a built-in DIP switch that helps define each card's ID when multiple cards have been installed on the same PC chassis. The board ID setting function is very useful when users build their system with multiple PCI-1756 cards. With correct Board ID settings, you can easily identify and access each card during hardware configuration and software programming.

Channel-Freeze Function

The PCI-1756 provides Channel-Freeze function, which can be enabled either in dry contact or wet contact mode (selectable by the on-board jumper). When the Channel-Freeze function is enabled, the last status of each digital output channel will be safely kept for emergency use. Moreover, you can enable this function through software as it is useful in software simulation and testing program.

Reset Protection

When the system has undergone a hot reset (i.e. without turning off the system power), the PCI-1756 can either retain outputs values of each channel, or return to its default configuration as open status, depending on its on-board jumper setting. This function protects the system from wrong operations during unexpected system resets.

Note! *For detailed specifications of the PCI-1756, please refer to Appendix A.*

1.3 Applications

- Industrial ON/OFF control
- Switch status sensing
- BCD interfacing
- Digital I/O control
- Industrial and lab automation

1.4 Installation Guide

Before you install your PCI-1756 card, please make sure you have the following necessary components:

- **PCI-1756 DAQ Card**
- **PCI-1756 Startup or User Manual**
- **Driver Software** Advantech DAQNavi software (included in DVDROM)
- **Wiring Cable** PCL-10250 or PCL-101100M (optional)
- **Wiring Board** ADAM-3951 or ADAM-39100 (optional)
- **Computer** PC or workstation with PCI Express bus slot (running Windows
- XP/Vista/7)

Other optional components are also available for enhanced operation:

- Advantech DAQ tools, LabView or other 3rd-party software

After you get the necessary components and maybe some accessories for enhanced operation for your DA&C card, you can then begin the Installation procedures. Figure 1.1 on the next page provides a concise flow chart to give users a broad picture of the software and hardware installation procedures:

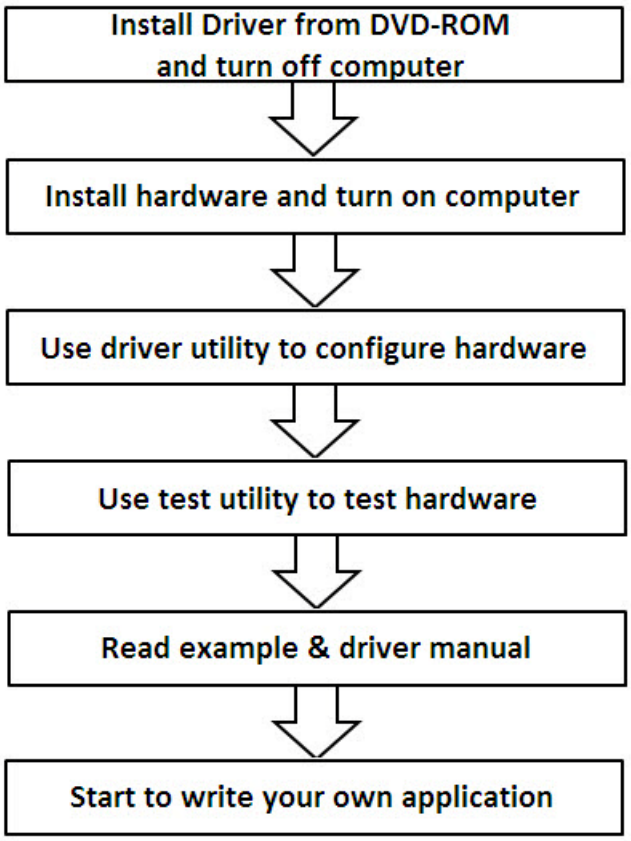

Figure 1.1 Installation Flow Chart

1.5 Software Overview

Advantech offers a rich set of DLL drivers, third-party driver support and application software to help fully exploit the functions of your PCI-1756 card:

- DAQNavi software (on the companion DVD-ROM)
- LabView driver
- Advantech DAQ tools

Programming choices for DA&C cards

You may use Advantech application software such as Advantech DAQNavi software. On the other hand, advanced users can use register level programming, although this is not recommended due to its laborious and time-consuming nature.

DAQNavi Software

Advantech DAQNavi software includes device drivers and SDK which features a complete I/O function library to help boost your application performance. This software is included in the companion DVD-ROM at no extra charge and comes with all Advantech DA&C cards. The Advantech DAQNavi software for Windows XP/Vista/7 works seamlessly with development tools such as Visual Studio .Net, Visual C++, Visual Basic and Borland Delphi.

Register-level Programming

Register-level programming is available for experienced programmers who find it necessary to write code directly at the level of the device register. Since register-level programming requires much effort and time, we recommend that you use the Advantech DAQNavi software instead. However, if register-level programming is indispensable, please contact the technical support team to request the relative information.

1.6 DAQNavi Device Driver Programming Roadmap

This section will provide you a roadmap to demonstrate how to build an application from scratch using Advantech DAQNavi device drivers with your favorite development tools such as Visual Studio.Net, Visual C++, Visual Basic and Borland Delphi. The step-by-step instructions on how to build your own applications using each development tool will be given in the DAQNavi SDK Manual. Moreover, a rich set of example source code is also given for your reference.

1.6.1 Programming Tools

Programmers can develop application programs with their favorite development tools:

- Visual Studio.Net
- Visual C++ and Visual Basic
- Borland Delphi

For instructions on how to begin programming works in each development tool, Advantech offers Tutorial Chapter in the DAQNavi SDK Manual for your reference. Please refer to the corresponding sections in this chapter on the DAQNavi SDK Manual to begin your programming efforts. You can also look at the example source code provided for each programming tool, since they can get you very well oriented.

The DAQNavi SDK Manual can be found on the companion DVD-ROM. Alternatively, if you have already installed the DAQNavi SDK on your system, the DAQNavi SDK Manual can be readily accessed through the Start button:

Start\Programs\Advantech Automation\DAQNavi\DAQNavi Manuals\DAQNavi SDK Manual

The example source code could be found under the corresponding installation folder such as the default installation path:

\Advantech\DAQNavi\Examples

For information about using other function groups or other development tools, please refer to the Using DAQNavi SDK chapter in the DAQNavi SDK Manual, or the video tutorials in the Advantech Navigator.

1.6.2 Programming with DAQNavi Device Drivers Function Library

Advantech DAQNavi device drivers offer a rich function library that can be utilized in various application programs. This function library consists of numerous APIs that support many development tools, such as Visual Studio .Net, Visual C++, Visual Basic and Borland Delphi.

According to their specific functions or services, APIs can be categorized into several function groups:

- Analog Input Function Group
- Analog Output Function Group
- Digital Input/Output Function Group
- Counter Function Group

For the usage and parameters of each function, please refer to the Using *DAQNavi SDK chapter in the DAQNavi SDK Manual.*

1.6.3 Troubleshooting DAQNavi Device Drivers Error

Driver functions will return a status code when they are called to perform a certain task for the application. When a function returns a code that is not success, it means the function has failed to perform its designated function. To troubleshoot the device drivers error, you can check the error code and error description within the Error Control of each function in the *DAQNavi SDK Manual*.

1.7 Accessories

Advantech offers a complete set of accessory products to support the PCI-1756 card. These accessories include:

Wiring Cables

- **PCL-10250** The PCL-10250 is a 100-pin SCSI to two 50-pin SCSI shielded cable that specially designed for PCI-1756 card. It should be used with ADAM-3951 wiring board.
- **PCL-101100M** The PCL-101100M cable is a 100pin SCSI shielded cable. It can be used with ADAM-39100 wiring board.

Wiring Boards

- **ADAM-3951** The ADAM-3951 is a 50-pin SCSI wiring terminal module with LED indicators for DIN-rail mounting.
- **ADAM-39100** The ADAM-39100 is a 100-pin SCSI wiring terminal module with DIN-rail mounting.

Chapter 2

Installation

This chapter provides a packaged item checklist, proper instructions for unpacking and step-by-step procedures for both driver and card installation.

Sections include:

- Unpacking
- Driver Installation
- Hardware Installation
- Device Setup & Configuration

2.1 Unpacking

After receiving your PCI-1756 package, please inspect its contents first. The package should contain the following items:

- PCI-1756 DAQ Card
- StartUp or User Manual
- Companion DVD-ROM with DAQNavi drivers included.

The PCI-1756 card harbor certain electronic components vulnerable to electrostatic discharge (ESD). ESD can easily damage the integrated circuits and certain components if preventive measures are ignored.

Before removing the card from the antistatic plastic bag, you should take the following precautions to ward off possible ESD damage:

- Touch the metal part of your computer chassis with your hand to discharge the static electricity accumulated on your body. Alternatively, one can also use a grounding strap.
- Touch the anti-static bag to a metal part of your computer chassis before opening the bag.
- Take hold of the card only by the metal bracket when removing it out of the bag.

After taking out the card, you should first:

- Inspect the card for any possible signs of external damage (loose or damaged components, etc.). If the card is visibly damaged, please notify our service department or our local sales representative immediately.
- Do not install a damaged card into your system.

Also, pay extra caution to the following aspects during installation:

- Avoid physical contact with materials that could hold static electricity such as plastic, vinyl and Styrofoam.
- Whenever you handle the card, grasp it only by its edges. DO NOT TOUCH the exposed metal pins of the connector or the electronic components.

Note! *Keep the anti-static bag for future use. You might need the original bag to store the card if you have to remove the card from a PC or transport it elsewhere.*

2.2 Driver Installation

We recommend you install the driver before you install the PCI-1756 card into your system, since this will guarantee a smooth installation process.

The Advantech DAQNavi Device Drivers Setup program for the PCI-1756 card is included in the companion DVD-ROM that is shipped with your DA&C card package. Please follow the steps below to install the driver software:

1. Insert the companion DVD-ROM into your DVD-ROM drive.
2. The Setup program will be launched automatically if you have the autoplay function enabled on your system. When the Setup Program is launched, you will see the following Setup Screen.

Note! *If the autoplay function is not enabled on your computer, use Windows Explorer or Windows Run command to execute autorun.exe on the companion DVD-ROM.*

Figure 2.1 Setup Screen of Advantech Automation Software

3. Select the DAQNavi option to install.
4. Select the Individual Driver option.
5. Select the PCI series and the specific device then follow the installation instructions step by step to complete your device driver installation and setup.
6. Back and select the DAQNavi SDK to install the Advantech Navigator.

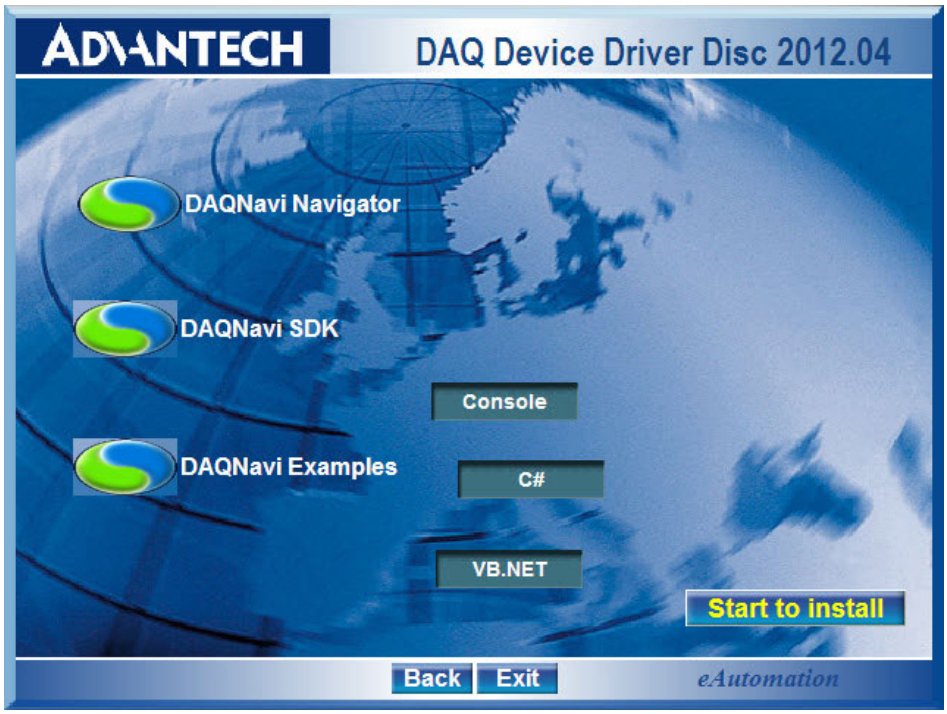

Figure 2.2 DAQNavi Installation Setup Screen

For further information on driver-related issues, an online version of the DAQNavi SDK Manual is available by accessing the following path:

Start/Programs/Advantech Automation/DAQNavi/DAQNavi Manuals/ DAQNavi SDK Manual

Note! *You can always get the latest DAQNavi device drivers and SDK from the Advantech Support Portal: http://support.advantech.com.tw/support/default.aspx*

2.3 Hardware Installation

Note! *Make sure you have installed the driver before you install the card (please refer to Chapter 2.2 Driver Installation)*

After the Device Drivers installation is completed you can install the PCI-1756 card into any PCI slot on your computer. However, it is suggested that you refer to the computer's user manual or related documentation if you have any doubts. Please follow the steps below to install the card onto your system.

1. Turn off your computer and unplug the power cord and cables. TURN OFF your computer before installing or removing any components on the computer.
2. Remove the cover of your computer.
3. Remove the slot cover on the back panel of your computer.
4. Touch the metal part on the surface of your computer to neutralize the static electricity that might be on your body.
5. Insert the PCI-1756 card into a PCI slot. Hold the card only by its edges and carefully align it with the slot. Insert the card firmly into place. Use of excessive force must be avoided; otherwise, the card might be damaged.
6. Fasten the bracket of the PCI card on the back panel rail of the computer with screws.
7. Connect appropriate accessories (100-pin cable, wiring terminals, etc. if necessary) to the PCI-1756 card.
8. Replace the cover of your computer chassis. Re-connect the cables you removed in step 2.
9. Plug in the power cord and turn on the computer.

After your card is properly installed on your system, you can now configure your device using the Advantech Navigator Program that has itself already been installed on your system during driver setup. A complete device installation procedure should include device setup, configuration and testing. The following sections will guide you through the Setup, Configuration and Testing of your device.

2.4 Device Setup & Configuration

The Advantech Navigator program is a utility that allows you to setup, configure and test your device, and later stores your settings on the system registry. These settings will be used when you call the APIs of DAQNavi device drivers. It also provides the programming reference, user guides and video tutorials.

Setting Up the Device

1. To install the I/O device for your card, you must first run the Advantech Navigator program (by accessing Start/Programs/ Advantech Automation/DAQNavi/ Advantech Navigator).
2. You can then view the device(s) already installed on your system (if any) on the Installed Devices list. If the software and hardware installation are completed, you will see PCI-1756 card in the Installed Devices list.

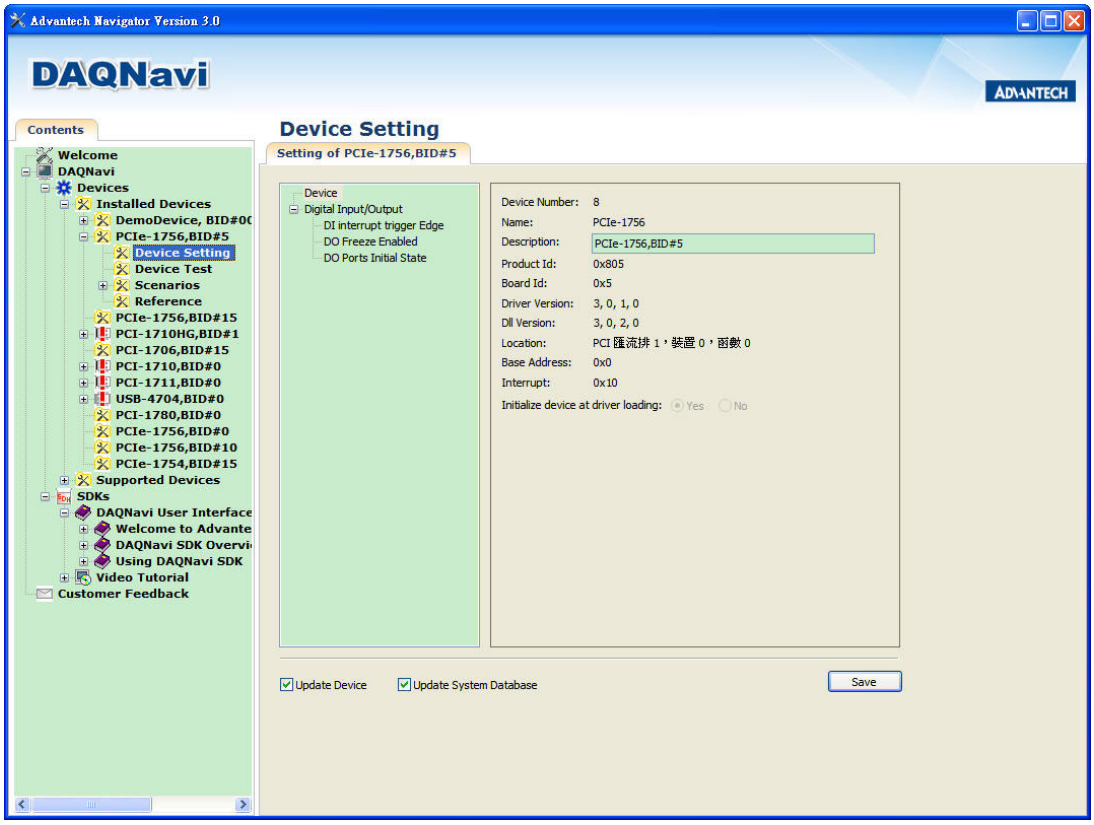

Figure 2.3 The Device Setting of PCI-1756

Configuring the Device

3. Please go to the Digital Input/Output page to configure your device. Here you can set the DI interrupt trigger edge, enable/disable the Channel-Freeze function and also the DO ports initial status of PCI-1756.

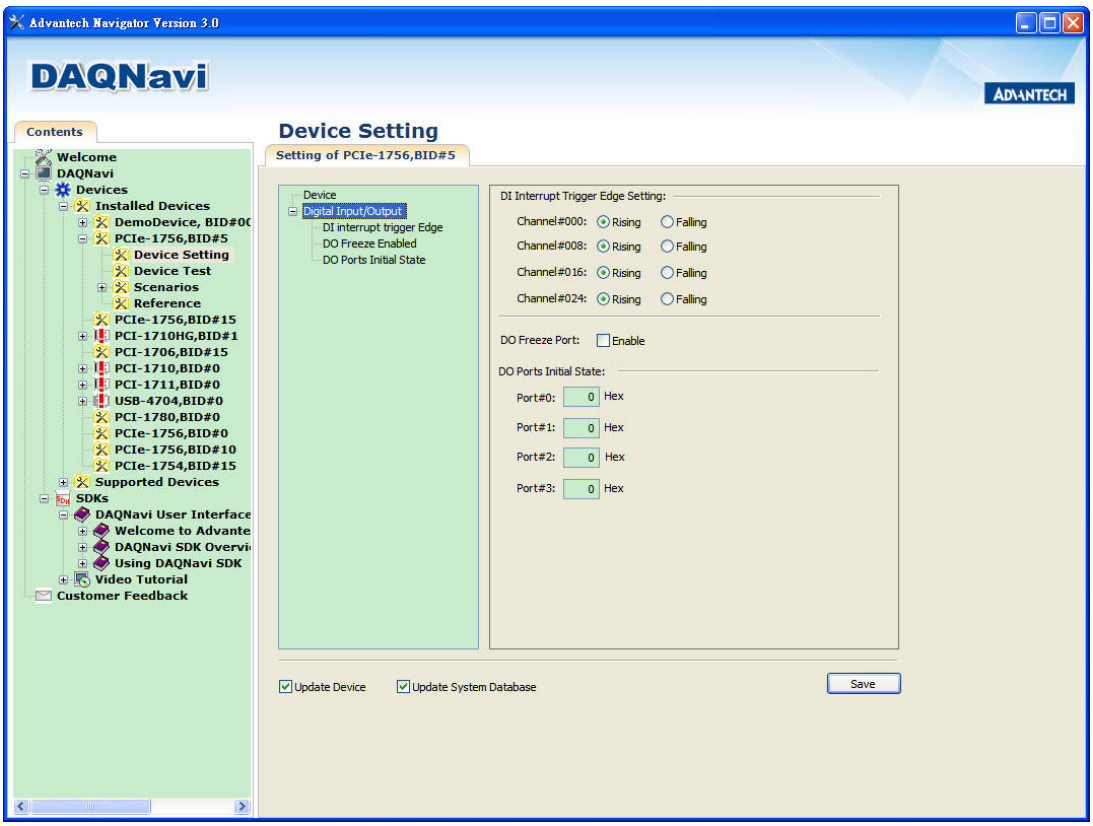

Figure 2.4 The Digital I/O Setting Page

4. After your card is properly installed and configured, you can go to the Device Test page to test your hardware by using the testing utility supplied.

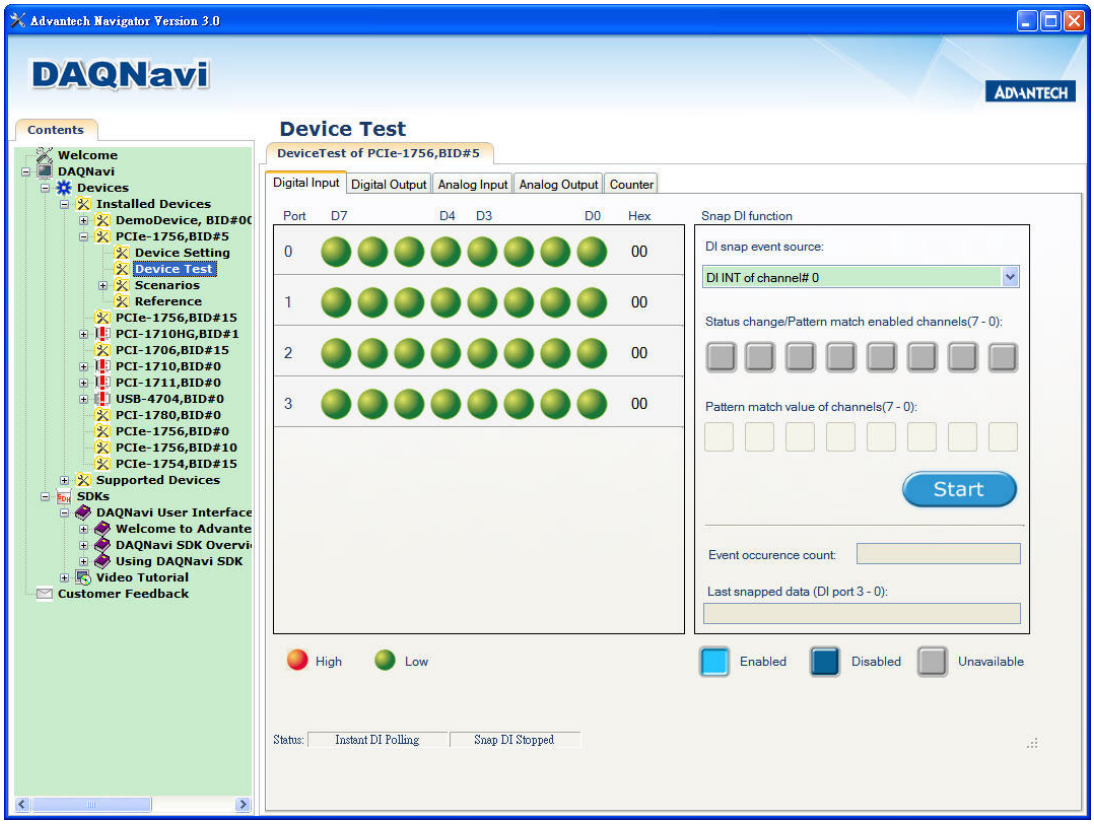

Figure 2.5 The Device Testing of PCI-1756

For more detailed information, please refer to the DAQNavi SDK Manual or the User Interface Manual in the Advantech Navigator.

Chapter 3

Signal Connections

This chapter provides useful information about how to connect input and output signals to the PCI-1756 cards via the I/O connector.

Sections include:

- Overview
- Switch and Jumper Settings
- Signal Connections
- Field Wiring Considerations

3.1 Overview

Maintaining signal connections is one of the most important factors in ensuring that your application system is sending and receiving data correctly. A good signal connection can avoid unnecessary and costly damage to your PC and other hardware devices. This chapter provides useful information about how to connect input and output signals to the PCI-1756 cards via the I/O connector.

3.2 Switch and Jumper Settings

Please refer to Figure 3.1 for jumper and switch locations on PCI-1756.

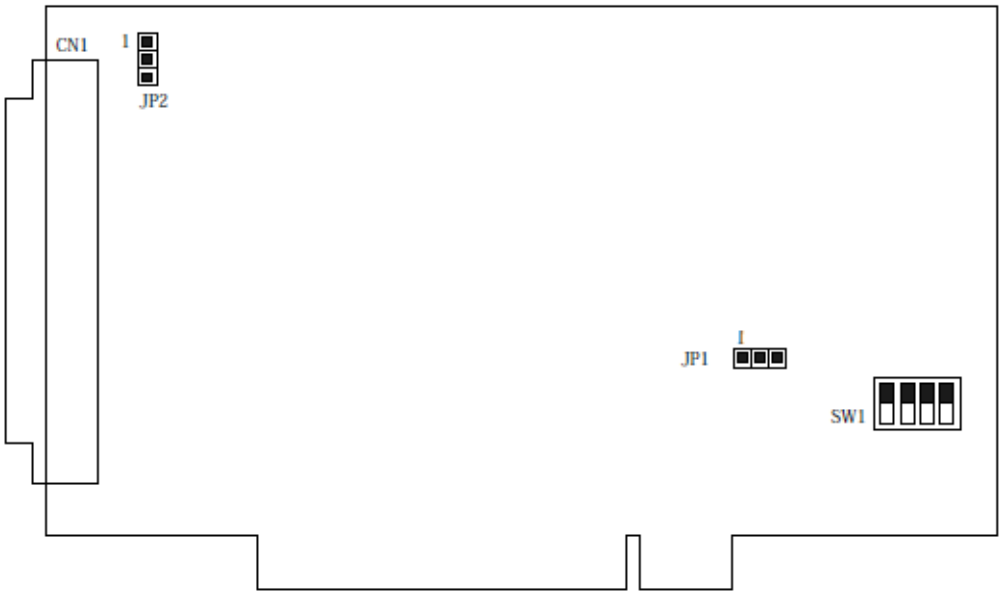

Figure 3.1 Connector and Switch Locations

3.2.1 Board ID (SW1)

The PCI-1756 have a built-in DIP switch (SW1), which is used to define each card's board ID. When there are multiple cards on the same chassis, this board ID switch is useful for identifying each card's device number. After setting for each PCI-1756, you can identify each card in system with different device numbers. The default value of board ID is 0 and if you need to adjust it to other value, please set the SW1 by referring to Table 3.1.

Table 3.1: Board ID Setting (SW1)

BoardID (dec)			**Switch Position**	
* = default	1 (ID3)	2 (ID2)	3 (ID1)	4 (ID0)
0	ON	ON	ON	ON
1	ON	ON	ON	OFF
2	ON	ON	OFF	ON
3	ON	ON	OFF	OFF
4	ON	OFF	ON	ON
5	ON	OFF	ON	OFF
6	ON	OFF	OFF	ON
7	ON	OFF	OFF	OFF
8	OFF	ON	ON	ON
9	OFF	ON	ON	OFF
10	OFF	ON	OFF	ON
11	OFF	ON	OFF	OFF
12	OFF	OFF	ON	ON
13	OFF	OFF	ON	OFF
14	OFF	OFF	OFF	ON
15	OFF	OFF	OFF	OFF

Default Setting is 0.

3.2.2 Power On Configuration(JP1)

Default configuration after power on, and hardware reset is to set all the isolated output channels to open status (the current of the load can't be sink) so that the external devices will not be damaged when the system starts or resets. When the system is hot reset, then the status of isolated digital output channels are selected by jumper JP1. Table 3.2 shows the configuration of jumper JP1.

Table 3.2: Power on configuration after hot reset (JP1)

JP1	Power on configuration after hot reset
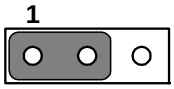	Default configuration
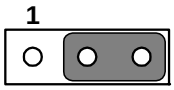	Keep last status after hot reset

3.2.3 Channel-Freeze Function (JP2)

The PCI-1756 provides the channel-freeze function for isolated digital output channels. When Channel-Freeze function is enabled, all ports on the card will be locked so that the data transmitted (from the host PC) to the card won't be transferred to the DO ports. Once the Channel-Freeze function is enabled, each port status is immediately frozen into its last valid value before the Channel-Freeze. Since the value transmitted (from the host PC) to the card is also stored in the buffers on PC, users can call the relative function to read back the DO channel value, this function will determine that:

- If Channel-Freeze function is disabled, it will return the DO value on the port
- If Channel-Freeze function is enabled, it will return the value from the buffers on host PC

Refer to Table 3.3 for setting dry/wet contact of Channel-Freeze function.

Table 3.3: Dry/Wet Contact of Channel-Freeze Function (JP2)

JP2	Input Mode
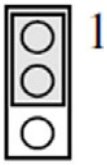	Dry contact input mode
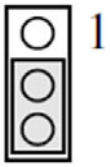	Wet contact input mode (Default setting)

3.3 Signal Connections

Pin Assignment

The I/O connector on the PCI-1756 is a 100-pin connector that enable you to connect to accessories with the PCL-10250 or PCL-101100M shielded cable.

Figure 3.2 shows the pin assignments for the 100-pin I/O connector on the PCI-1756, and Table 3.4 shows its I/O connector signal description.

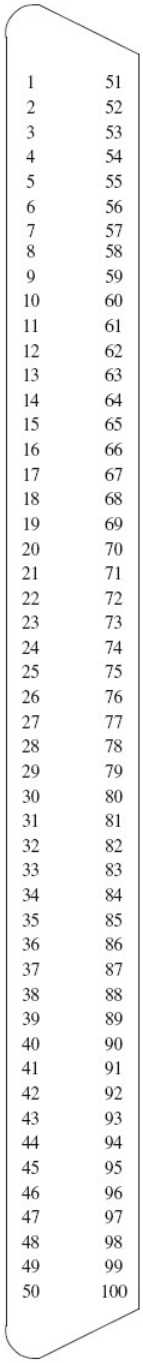

IDI00	1	51	IDI01
IDI02	2	52	IDI03
IDI04	3	53	IDI05
IDI06	4	54	IDI07
IDI08	5	55	IDI09
IDI10	6	56	IDI11
IDI12	7	57	IDI13
IDI14	8	58	IDI15
ECOM0	9	59	ECOM0
ECOM0	10	60	ECOM0
NC	11	61	NC
NC	12	62	NC
IDI16	13	63	IDI17
IDI18	14	64	IDI19
IDI20	15	65	IDI21
IDI22	16	66	IDI23
IDI24	17	67	IDI25
IDI26	18	68	IDI27
IDI28	19	69	IDI29
IDI30	20	70	IDI31
ECOM1	21	71	ECOM1
ECOM1	22	72	ECOM1
NC	23	73	NC
NC	24	74	NC
NC	25	75	NC
IDO00	26	76	IDO01
IDO02	27	77	IDO03
IDO004	28	78	IDO05
IDO006	29	79	IDO07
IDO08	30	80	IDO09
IDO10	31	81	IDO11
IDO12	32	82	IDO13
IDO14	33	83	IDO15
PCOM0	34	84	PCOM0
PCOM0	35	85	PCOM0
IGND	36	86	IGND
IGND	37	87	IGND
IDO16	38	88	IDO17
IDO18	39	89	IDO19
IDO20	40	90	IDO21
IDO22	41	91	IDO23
IDO24	42	92	IDO25
IDO26	43	93	IDO27
IDO28	44	94	IDO29
IDO30	45	95	IDO31
PCOM1	46	96	PCOM1
PCOM1	47	97	PCOM1
IGND	48	98	IGND
IGND	49	99	IGND
CH_FRZ_IN	50	100	CH_FRZ_COM

Figure 3.2 I/O Connector Pin Assignments

Note! *The PCL-10250 shielded cable is especially designed for the PCI-1756 to reduce noise in the signal lines. Please refer to Appendix C for the pin assignment of connecting PCL-10250 and ADAM-3951.*

3.3.1 I/O Connector Pin Definition

Table 3.4: I/O Connector Signal Descriptions

Pin Name	Reference	Direction	Description
IDI<00 ~ 15>	ECOM0	Input	Isolated digital input of group 0
IDI<16 ~ 31>	ECOM1	Input	Isolated digital input of group 1
IDO<00 ~ 15>	PCOM0	Output	Isolated digital output of group 0
IDO<16 ~ 31>	PCOM1	Output	Isolated digital output of group 1
ECOM0	-	Input	Common pin for IDI00~IDI15
ECOM1	-	Input	Common pin for IDI16~IDI31
PCOM0	-	Output	Common pin of IDO00~IDO15 for inductive loads
PCOM1	-	Output	Common pin of IDO16~IDO31 for inductive loads
IGND	-	-	Isolated ground
CH_FRZ_IN	CH_FRZ_COM	Input	Channel-Freeze function input pin
CH_FRZ_COM	-	Input	Common pin for Channel-Freeze function input

3.3.2 Isolated Digital Input

Each of isolated digital input channels accepts bi-directional 10 ~ 50 V_{DC} voltage inputs. Meaning that you can apply positive or negative voltage to an isolated input pin (V_{IN}). Every 16 input channels share one common pin. Figure 3.3 shows how to connect an external input source to one of the card's isolated input channels.

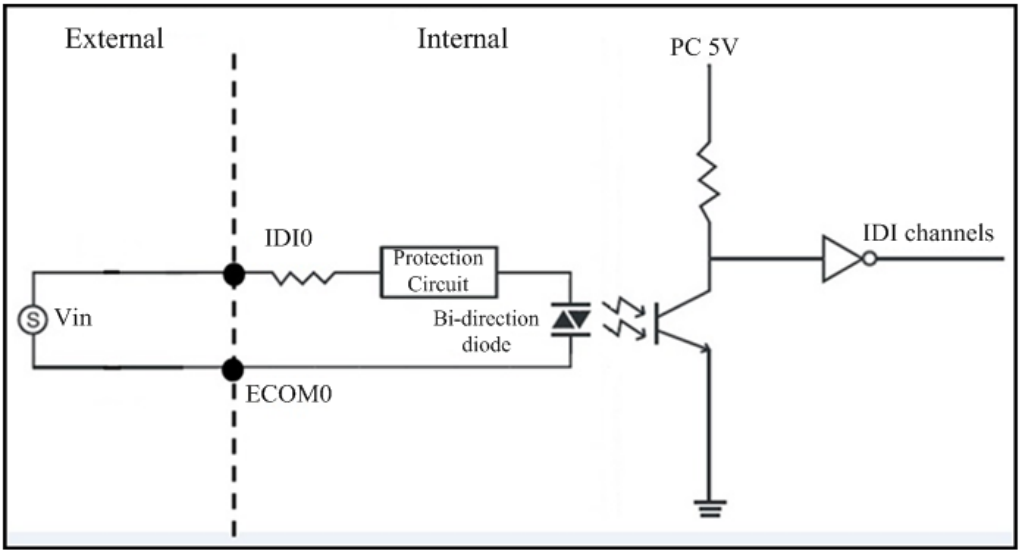

Figure 3.3 Isolated Digital Input Connection

3.3.3 Isolated Digital Output

Each of isolated output channels comes equipped with a MOSFET, polyswitch (for current protection) and flywheel diode for using with inductive loads which can be activated by connecting PCOM to V_{DC}. If an external voltage (5 ~ 40 V_{DC}) is applied to an isolated output channel, the current will flow from the external voltage source to the card. Please note that the current through each IDO channel should not exceed 200 mA.

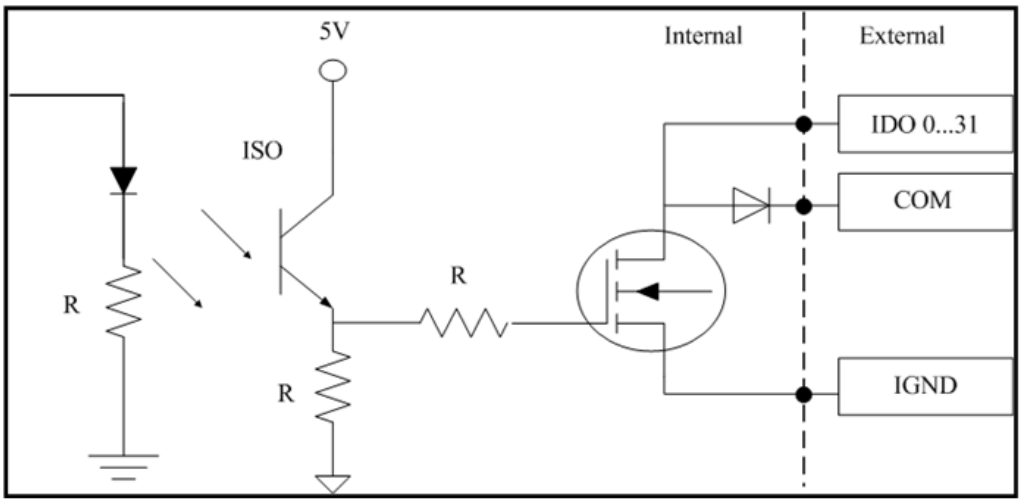

Figure 3.4 Isolated Digital Output Connection

3.3.4 Channel-Freeze Function

The PCI-1756 provides a digital input channel (CH_FRZ_IN) to enable the channel-freeze function. The channel-freeze function acts when the pin CH_FRZ_IN is activated. Moreover, you can setup the input mode of channel-freeze function input channel CH_FRZ_IN as dry contact input mode or wet contact input mode selected by on-board jumper JP2. The wiring in wet contact and dry contact input mode are shown in Figures 3.5 and 3.6.

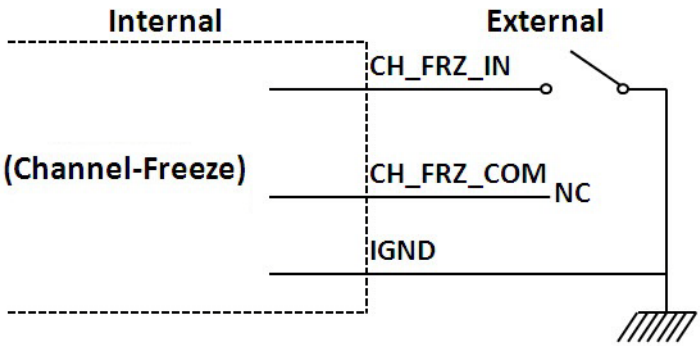

Figure 3.5 Wiring in wet contact input mode

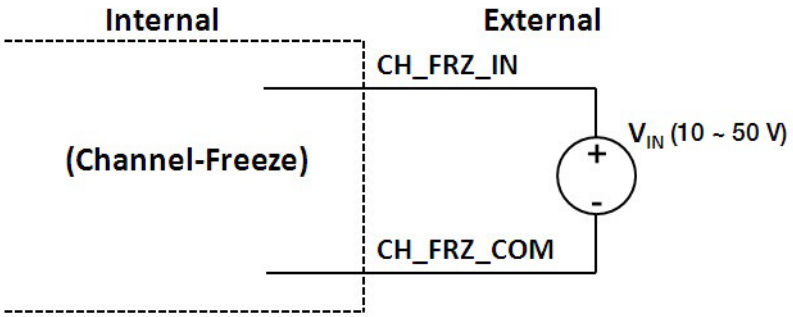

Figure 3.6 Wiring in dry contact input mode

3.4 Field Wiring Considerations

When you use PCI-1756 cards to acquire data from outside, noises in the environment might significantly affect the accuracy of your measurements if due cautions are not taken. The following measures will be helpful to reduce possible interference running signal wires between signal sources and the PCI-1756 card.

- The signal cables must be kept away from strong electromagnetic sources such as power lines, large electric motors, circuit breakers or welding machines, since they may cause strong electromagnetic interference. Keep the analog signal cables away from any video monitor, since it can significantly affect a data acquisition system.
- If the cable travels through an area with significant electromagnetic interference, you should adopt individually shielded, twisted-pair wires as the analog input cable. This type of cable has its signal wires twisted together and shielded with a metal mesh. The metal mesh should only be connected to one point at the signal source ground.
- Avoid running the signal cables through any conduit that might have power lines in it.
- If you have to place your signal cable parallel to a power line that has a high voltage or high current running through it, try to keep a safe distance between them. Alternatively, you can place the signal cable at a right angle to the power line to minimize the undesirable effect.
- The signals transmitted on the cable will be directly affected by the quality of the cable. In order to ensure better signal quality, we recommend that you use the PCL-10250 or PCL-101100M shielded cable.

Appendix A

Specifications

A.1 Isolated Digital Input

Number of Input Channel	32	
Interrupt Inputs	2 (IDI0, IDI16)	
Optical Isolation	2500 V_{DC}	
Opto-isolator Response Time	100 µs	
Over-voltage Protect	70 V_{DC}	
Input Resistance	5.2 KΩ	
Input Voltage	VIH (max.)	50 V_{DC}
	VIH (min.)	10 V_{DC}
	VIL (max.)	3 V_{DC}
Input Current	10 V_{DC}	1.70 mA (typical)
	12 V_{DC}	2.10 mA (typical)
	24 V_{DC}	4.40 mA (typical)
	48 V_{DC}	9.00 mA (typical)
	50 V_{DC}	9.40 mA (typical)

A.2 Isolated Digital Output

Number of Output Channel	32
Optical Isolation	2500 V_{DC}
Opto-isolator Response Time	100 µs
Supply Voltage	5 ~ 40 V_{DC}
Sink Current	200 mA max/channel

A.3 General

I/O Connector Type	100-pin SCSI-II female	
Dimensions	175 mm x 100 mm (6.8” x 3.9”)	
Power Consumption	PCI-1756	+5 V @ 285 mA (typical)
		+5 V @ 475 mA (typical)
Temperature	Operation	0 ~ +60° C (32 ~ 140° F) (refer to IEC 68-2-1,2)
	Storage	-20 ~ +70° C (-4 ~ 158° F)
Relative Humidity	5 ~ 95% RH non-condensing (refer to IEC 60068-2-3)	
Certification	CE Class A certified	

A.4 Register Table

Register Format of PCI-1756.

Table A.1: Register Functions

Base Addr. + Hex		7	6	5	4	3	2	1	0
0H	R	Isolated Digital Input Group 0							
		IDI7	IDI6	IDI5	IDI4	IDI3	IDI2	IDI1	IDI0
	W	N/A							
1H	R	Isolated Digital Input Group 0							
		IDI15	IDI14	IDI13	IDI12	IDI11	IDI10	IDI9	IDI8
	W	N/A							
2H	R	Isolated Digital Input Group 1							
		IDI23	IDI22	IDI21	IDI20	IDI19	IDI18	IDI17	IDI16
	W	N/A							
3H	R	Isolated Digital Input Group 1							
		IDI31	IDI30	IDI29	IDI28	IDI27	IDI26	IDI25	IDI24
	W	N/A							
4H	R	Isolated Digital Output Group 0 Read Back							
		IDO7	IDO6	IDO5	IDO4	IDO3	IDO2	IDO1	IDO0
	W	Digital Output Group 0							
		IDO7	IDO6	IDO5	IDO4	IDO3	IDO2	IDO1	IDO0
5H	R	Isolated Digital Output Group 0 Read Back							
		IDO15	IDO14	IDO13	IDO12	IDO11	IDO10	IDO9	IDO8
	W	Digital Output Group 0							
		IDO15	IDO14	IDO13	IDO12	IDO11	IDO10	IDO9	IDO8
6H	R	Isolated Digital Output Group 1 Read Back							
		IDO23	IDO22	IDO21	IDO20	IDO19	IDO18	IDO17	IDO16
	W	Isolated Digital Output Group 1							
		IDO23	IDO22	IDO21	IDO20	IDO19	IDO18	IDO17	IDO16
7H	R	Isolated Digital Output Group 1 Read Back							
		IDO31	IDO30	IDO29	IDO28	IDO27	IDO26	IDO25	IDO24
	W	Isolated Digital Output Group 1							
		IDO31	IDO30	IDO29	IDO28	IDO27	IDO26	IDO25	IDO24
8H	R	Group 0 Interrupt Control Register							
						F0	E0	INT0/E	L0/E
	W	Group 0 Interrupt Control Register							
						F0*	E0	INT0/E	L0/E
9H	R	N/A							
	W	N/A							

Table A.1: Register Functions

AH	R	Group 1 Interrupt Control Register			
		F1	E1	INT1/E	L1/E
	W	Group 1 Interrupt Control Register			
		F1*	E1	INT1/E	L1/E
BH ~ FH	R	N/A			
	W	N/A			
10H	R	Board ID Register			
		BOID3	BOID2	BOID1	BOID0
	W	N/A			
11H	R	N/A			
	W	N/A			
12H	R	Channel Freeze Function Control Register			
				CFS	CFC
	W	Channel Freeze Function Control Register			
					CFC
13H	R	N/A			
	W	N/A			

Appendix B

Block Diagrams

B.1 Block Diagrams

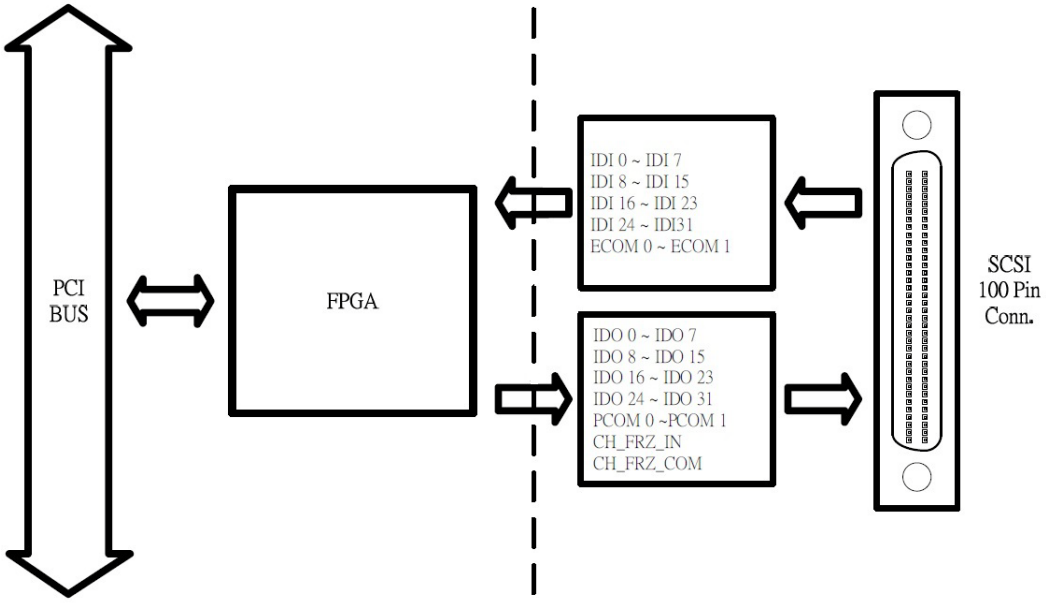

Appendix C

ADAM-3951 Pin Assignment

C.1 ADAM-3951 Pin Assignment

Please refer to Figure C.1 and Figure C.2 for the pin assignments if you select Advantech ADAM-3951 as your wiring board for connecting to PCL-10250 and PCI-1756.

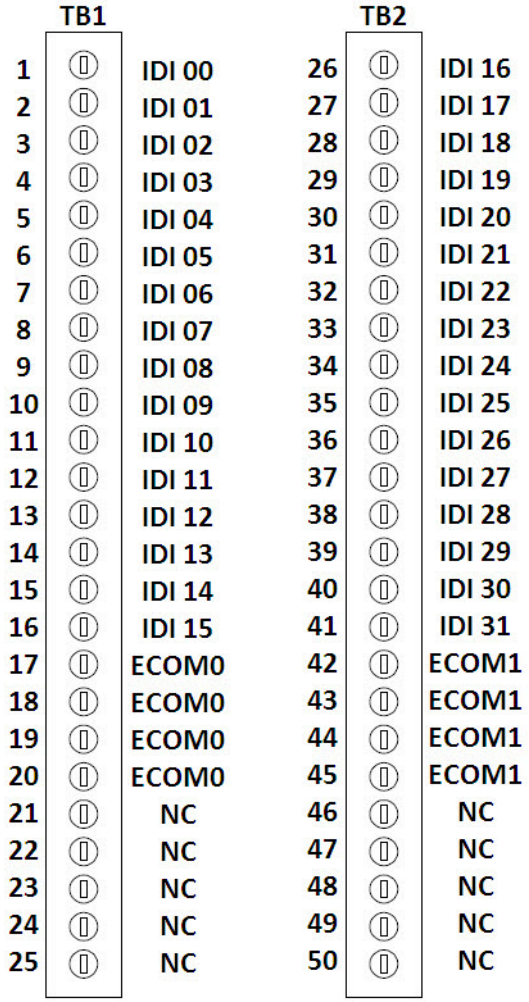

Figure C.1 Connect to PCL-10250 CON1

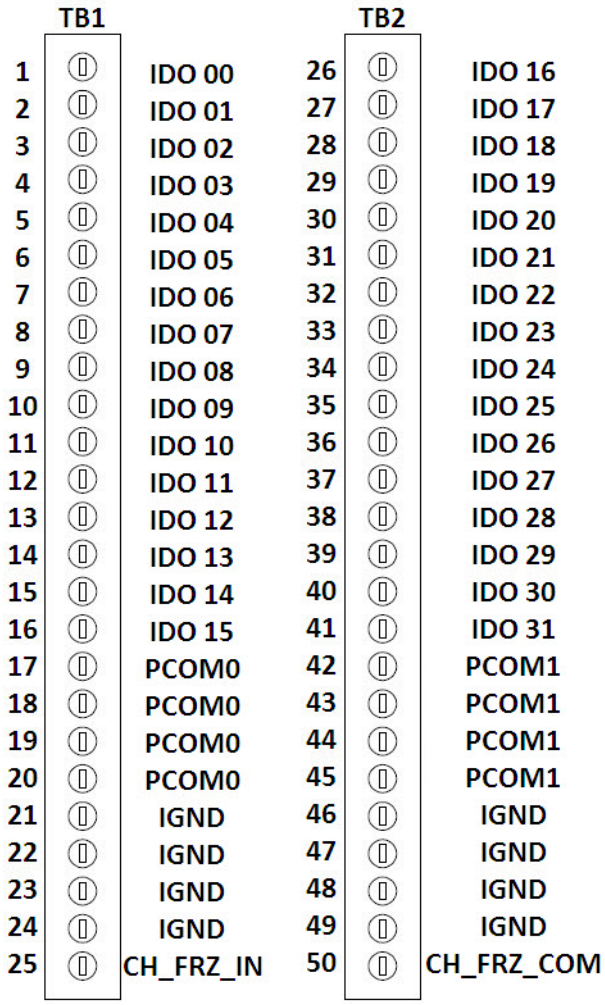

Figure C.2 Connect to PCL-10250 CON2

ADVANTECH

eAutomation

www.advantech.com